技术参数:
- 插针数: 12
- 额定电流
  信号针: 7A
- 额定电压: 25V~/60V-
- 额定脉冲电压: 1.5KV
- 污染等级: 3
- 绝缘电阻: ≥10^{12}Ω
- 温度范围: -40℃ ... +130℃
- 阻燃等级: V0 (UL94)
- 接触电阻: ≤5mΩ
- 插拔次数: ≥100
- 插体材料: PBT
- 插针材料: 铜合金
- 电镀材料: 金
- PCB插焊连接
  - 信号针: ø0.6mm

仅适用不封底下壳: HR23-BK-D2.7,HR23-BK/R-OD2.7
HR23-BK/R-OM2.5

Technical specification:
- Number of contacts: 12
- Rated current
  signal contact: 7A
- Rated voltage: 25V~/60V-
- Rated impulse voltage: 1.5KV
- Pollution degree: 3
- Insulation resistance: ≥10^{12}Ω
- Temperature range: -40℃ ... +130℃
- Flammability acc.to UL94: V0 (UL94)
- Contact resistance: ≤5mΩ
- Mating cycles: ≥100
- Material of insert: PBT
- Material of contact: copper alloy
- Contact plating: Au
- PCB solder termination
  - signal contact: ø0.6mm

Suitable only for bulkhead mounted housings: HR23-BK-D2.7, HR23-BK/R-OD2.7,HR23-BK/R-OM2.5

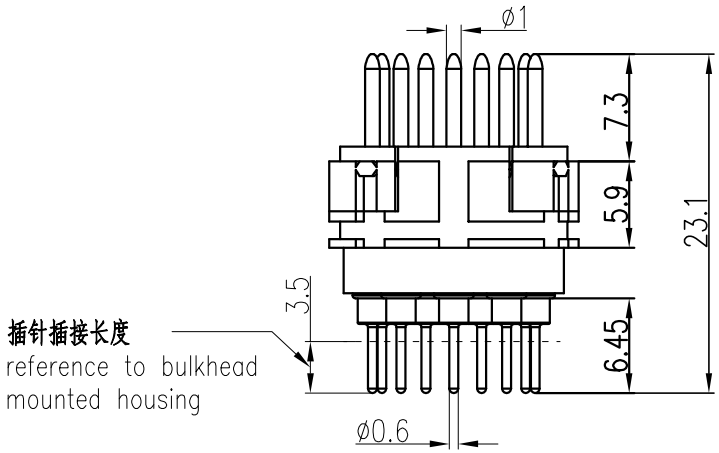

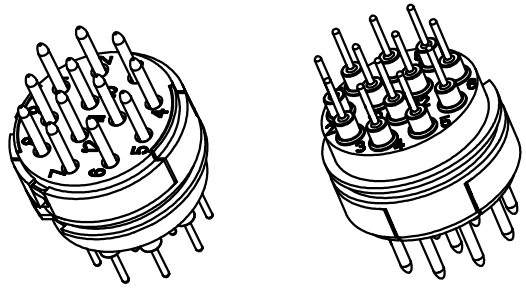

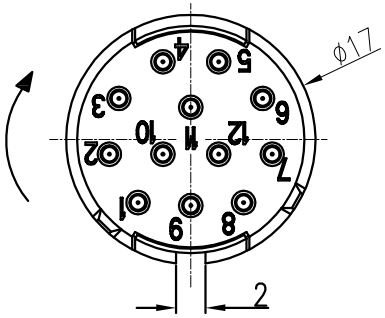

触点排列: 配合面
Contact arrangement: mating side

PCB孔细节
PCB layout

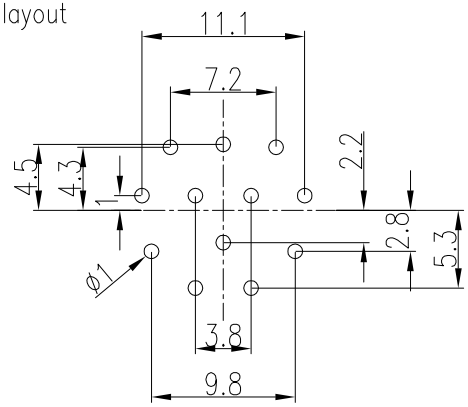

标记 Mark	处数 Number	变更描述/Description	签名 Signature	日期 Date

	姓名/Name	日期/Date		姓名/Name	日期/Date
绘图 Drawn	TC CHEN	04.05.2016	标准化 Stand.	–	–
审核 Checked	ZM LIN	04.05.2016			
工艺 Process	–	–	批准 Approved	YY LUO	04.05.2016

表面处理 Finish	–		
材料 Material	–		
比例 Scale	版本 REV.	重量 Weight	数量 Qty.
2:1	V1.1	6.7g	–
All Dimensions in mm Original Size DIN A 4			

图号 Drawing No.	–
产品代号 Part Code	HR23-012-MTHT
产品料号 Part No.	1810120140001
产品名称 Part Name	–

厦门唯恩电气有限公司
XIAMEN WAIN ELECTRICAL CO.LTD