| 日期/Date | 档案员 Filing Clerk |
|---|---|
| | |

M公制螺纹/Metric Thread

| 序号 No. | 产品名称 Part code | 产品料号 Part NO. | 螺纹规格 Thread size | 扳手尺寸SW Wrench size | 卡口范围ØC Clamping range | 螺纹外径AG Thread diameter | 螺纹长度GL Thread length | 重量/Weight g |
|---|---|---|---|---|---|---|---|---|
| 1 | WNAC-M12(D3-6) | 1021170111502 | M12*1.5 | 14 | 3-6 | 12 | 7 | 11.4 |
| 2 | WNAC-M12(D3-6.5) | 1021170111001 | M12*1.5 | 14 | 3-6.5 | 12 | 5 | 11.1 |
| 3 | WNAC-M16(D4-8) | 1021170131001 | M16*1.5 | 20 | 4-8 | 116 | 6 | 23 |
| 4 | WNAC-M18(D5-10) | 1021170141001 | M18*1.5 | 20 | 5-10 | 18 | 6 | 27 |
| 5 | WNAC-M20(D6-12) | 1021170151001 | M20*1.5 | 24 | 6-12 | 20 | 7 | 36.4 |
| 6 | WNAC-M20(D10-14) | 1021170151002 | M20*1.5 | 24 | 10-14 | 20 | 7 | 34.4 |
| 7 | WNAC-M24(D8-14) | 1021170171001 | M24*1.5 | 27 | 8-14 | 24 | 7 | 45 |
| 8 | WNAC-M25(D10-16) | 1021170181002 | M25*1.5 | 30 | 10-16 | 25 | 12 | 61.8 |
| 9 | WNAC-M25(D13-18) | 1021170181001 | M25*1.5 | 30 | 13-18 | 25 | 13 | 60.5 |
| 10 | WNAC-M30(D13-18) | 1021170381001 | M30*1.5 | 35 | 13-18 | 30 | 8 | 85 |
| 11 | WNAC-M32(D15-22) | 1021170191002 | M32*1.5 | 40 | 15-22 | 32 | 13 | 110.4 |
| 12 | WNAC-M32(D18-25) | 1021170191001 | M32*1.5 | 40 | 18-25 | 32 | 13 | 104 |
| 13 | WNAC-M36(D18-25) | 1021170401001 | M36*1.5 | 40 | 18-25 | 36 | 8 | 150 |
| 14 | WNAC-M40(D21-30) | 1021170201002 | M40*1.5 | 50 | 21-30 | 40 | 9 | 168 |
| 15 | WNAC-M40(D22-32) | 1021170201001 | M40*1.5 | 50 | 22-32 | 40 | 9 | 147.6 |
| 16 | WNAC-M48(D22-32) | 1021170451001 | M48*1.5 | 50 | 22-32 | 48 | 9 | 185 |
| 17 | WNAC-M50(D30-38) | 1021170461001 | M50*1.5 | 57 | 30-38 | 50 | 9 | 210 |
| 18 | WNAC-M56(D30-38) | 1021170471001 | M56*1.5 | 57 | 30-38 | 56 | 9 | 220 |
| 19 | WNAC-M63(D37-44) | 1021170481001 | M63*1.5 | 65 | 37-44 | 63 | 10 | 239 |

PG制螺纹/PG Thread

| 序号 No. | 产品名称 Part code | 产品料号 Part NO. | 螺纹规格 Thread size | 扳手尺寸SW Wrench size | 卡口范围ØC Clamping range | 螺纹外径AG Thread diameter | 螺纹长度GL Thread length | 重量/Weight g |
|---|---|---|---|---|---|---|---|---|
| 1 | WNAC-PG7(D3-6.5) | 1021170011001 | PG7 | 14 | 3-6.5 | 12.5 | 5 | 13 |
| 2 | WNAC-PG9(D4-8) | 1021170021001 | PG9 | 18 | 4-8 | 15.2 | 6 | 17 |
| 3 | WNAC-PG11(D5-10) | 1021170031001 | PG11 | 20 | 5-10 | 18.6 | 6 | 25.2 |
| 4 | WNAC-PG13.5(D6-12) | 1021170041001 | PG13.5 | 24 | 6-12 | 20.4 | 7 | 36.2 |
| 5 | WNAC-PG16(D8-14) | 1021170051001 | PG16 | 24 | 8-14 | 22.5 | 7 | 89.2 |
| 6 | WNAC-PG21(D13-18) | 1021170061001 | PG21 | 30 | 13-18 | 28.3 | 8 | 66.8 |
| 7 | WNAC-PG29(D18-25) | 1021170071001 | PG29 | 40 | 18-25 | 37 | 8 | 132 |
| 8 | WNAC-PG36(D22-32) | 1021170081001 | PG36 | 50 | 22-32 | 47 | 9 | 204 |
| 9 | WNAC-PG42(D30-38) | 1021170091001 | PG42 | 57 | 30-38 | 54 | 9 | 220 |

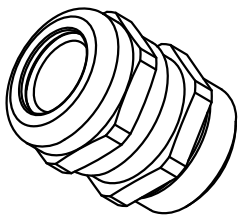

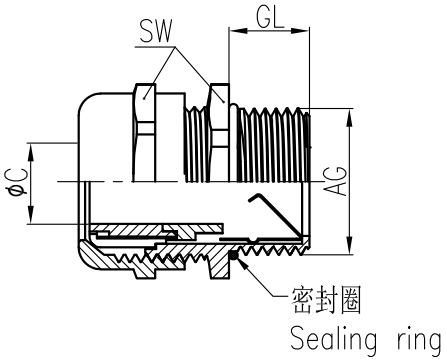


技术参数:
- 材料:
  - 主体: 黄铜镀镍
  - 密封元件: 尼龙66和丁腈橡胶
- 温度范围: -40℃-100℃，短时间可以达到120℃
- 防护等级: IP68（在使用O型圈的情况下）

Technical specification:
- Material:
  - Body: nickel-plated brass
  - Sealing: nylon and NBR
- Temperature range: -40℃-100℃, short-term 120℃
- Degree of protection: IP68(with O-sealing)

| 标记 Mark | 处数 Number | 变更描述/Description | 签名 Signature | 日期 Date |
|---|---|---|---|---|
| | | | | |
| | | | | |
| | | | | |

| | 姓名/Name | 日期/Date | | 姓名/Name | 日期/Date |
|---|---|---|---|---|---|
| 绘图 Drawn | BQ LUO | 18.10.2010 | 标准化 Stand. | – | – |
| 审核 Checked | P RAO | 18.10.2010 | | | |
| 工艺 Process | – | – | 批准 Approved | YY LIN | 18.10.2010 |

| 表面处理 Finish | – | 图号 Drawing No. | – |
|---|---|---|---|
| 材料 Material | – | 产品代号 Part Code | WNAC-PG42(D30-38) |
| | | 产品料号 Part No. | 1021170091001 |
| 比例 Scale | 版本 REV. / 重量 Weight / 数量 Qty. | 产品名称 Part Name | – |
| 1:1 | V1.1 / 220g / – | | |

All Dimensions in mm
Original Size DIN A 4

厦门唯恩电气有限公司
XIAMEN WAIN ELECTRICAL CO.LTD