日期/Date		档案员 Filing Clerk

M公制螺纹/Metric Thread

序号 No.	产品名称 Part code	产品料号 Part NO.	螺纹规格AG Thread size	配用软管d Fits to tubing size	扳手尺寸SW Wrench size	螺纹长度GL Thread length	外圆直径D External diameter	总长L Total lenght	重量/Weight g
1	WNC-M16/D10	1021140135003	M16*1.5	10	21.5	8	23.3	28	25.6
2	WNC-M16/D8	1021140135001	M16*1.5	8	21.5	8	23.3	25.5	35
3	WNC-M20/D12	1021140155001	M20*1.5	12	25.5	10	27.5	32	49.6
4	WNC-M20/D12-NBR	1021140155002	M20*1.5	12	25.5	10	27.5	32	35
5	WNC-M24/D15	1021140175001	M24*1.5	15	29.5	12	31.8	35	68.4
6	WNC-M30/D20	1021140385001	M30*2.0	20	35	12.5	37.5	37	108
7	WNC-M32/D20	1021140195005	M32*1.5	20	35	12.5	37.5	37	-
8	WNC-M32/D25	1021140195001	M32*1.5	25	43	15	46	41	103
9	WNC-M33/D25-NBR	1021140395001	M33*2.0	25	42.8	15.5	45.8	41	106
10	WNC-M36/D25	1021140405001	M36*2.0	25	43	15	46	41	115
11	WNC-M40/D32	1021140205001	M40*1.5	32	51.5	15	55	47	148

PG制螺纹/PG Thread

序号 No.	产品名称 Part code	产品料号 Part NO.	螺纹规格AG Thread size	配用软管d Fits to tubing size	扳手尺寸SW Wrench size	螺纹长度GL Thread length	外圆直径D External diameter	总长L Total lenght	重量/Weight g
1	WNC-PG9/D10	1021140025001	PG9	10	21.5	8.5	23.3	25.5	32
2	WNC-PG11/D10,NBR	1021140035003	PG11	10	21.5	8.5	23.3	25.5	25.8
3	WNC-PG11/D12,NBR	1021140035002	PG11	12	25.5	10	28.5	28	-
4	WNC-PG11/D12	1021140035001	PG11	12	25.5	10	28.5	28	35
5	WNC-PG13.5/D15	1021140045001	PG13.5	15	29.5	11.5	31.8	33	49
6	WNC-PG16/D15	1021140055001	PG16	15	29.5	11.5	31.8	34	48.8
7	WNC-PG16/D15-NBR	1021140055002	PG16	15	29.5	11.5	31.8	34	49.8
8	WNC-PG21/D20	1021140065001	PG21	20	35	13	37.5	37	70.5
9	WNC-PG21/D20-NBR	1021140065002	PG21	20	35	13	37.5	37	70.2
10	WNC-PG29/D25	1021140075001	PG29	25	43	15	46	41	107.2
11	WNC-PG29/D25-NBR	1021140075002	PG29	25	43	15	46	41	108
12	WNC-PG29/D32	1021140075003	PG29	32	50.5	14	55	44	149
13	WNC-PG29/D32-NBR	1021140075004	PG29	32	51.5	14	55	44	137.8
14	WNC-PG36/D32	1021140085003	PG36	32	51.5	14.5	55	45	-
15	WNC-PG36/D32-NBR	1021140085004	PG36	32	51.5	14.5	55	45	158.4
16	WNC-PG36/D38	1021140085001	PG36	38	58.5	16	61.5	47	196
17	WNC-PG42/D38	1021140095001	PG42	38	58.5	15	61.5	47	213
18	WNC-PG48/D51	1021140105001	PG48	51	71	18.5	74	52	300

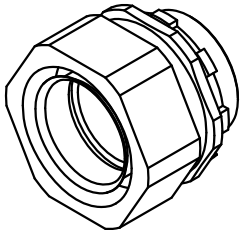

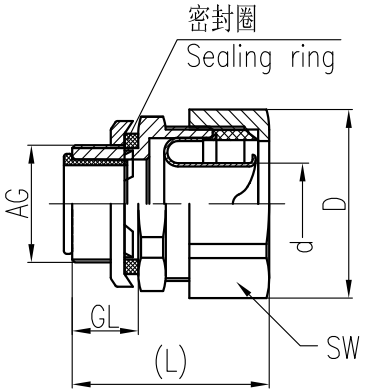

技术参数:
- 材料:
  - 主体: 锌合金
  - 密封元件: 丁腈橡胶
- 表面处理: 镀锌
- 温度范围: -40℃-100℃,短时间可以达到120℃
- 防护等级: IP65(在使用密封圈的情况下)

Technical specification:
- Material:
  - Body: zinc alloy
  - Sealing: NBR
- Surface: zinc plated
- Temperature range: -40℃-100℃, short-term 120℃
- Degree of protection: IP65(with sealing ring)

标记 Mark	处数 Number	变更描述/Description	签名 Signature	日期 Date

	姓名/Name	日期/Date		姓名/Name	日期/Date
绘图 Drawn	BQ LUO	18.10.2010	标准化 Stand.	-	-
审核 Checked	P RAO	18.10.2010			
工艺 Process	-	-	批准 Approved	YY LIN	18.10.2010

表面处理 Finish	-		
材料 Material	-		
比例 Scale	版本 REV.	重量 Weight	数量 Qty.
1:1	V1.1	196g	-

All Dimensions in mm
Original Size DIN A 4

图号 Drawing No.	-
产品代号 Part Code	WNC-PG36/D38
产品料号 Part No.	1021140085001
产品名称 Part Name	-

厦门唯恩电气有限公司
XIAMEN WAIN ELECTRICAL CO.LTD