| 日期/Date | | 档案员 Filing Clerk |
|---|---|---|

M公制螺纹/Metric Thread

| 序号 No. | 产品名称 Part code | 产品料号 Part NO. | 外螺纹规格AG Outside Thread | 内螺纹规格LG Inside Thread | 外螺纹长度GL Outside thread length | 总长L Total length | 扳手尺寸SW Wrench size | 重量/Weight g |
|---|---|---|---|---|---|---|---|---|
| 1 | WNSC-M16M12 | 1021040131001 | M16*1.5 | M12*1.5 | 6 | 9 | 17 | 8.8 |
| 2 | WNSC-M20M16 | 1021040151001 | M20*1.5 | M16*1.5 | 7 | 10 | 22 | 10.3 |
| 3 | WNSC-M25M20 | 1021040181001 | M25*1.5 | M20*1.5 | 7 | 10 | 27 | 16.2 |
| 4 | WNSC-M32M20 | 1021040191002 | M32*1.5 | M20*1.5 | 8 | 12 | 36 | 50 |
| 5 | WNSC-M32M25 | 1021040191001 | M32*1.5 | M25*1.5 | 8 | 11.5 | 35 | 34.4 |
| 6 | WNSC-M40M32 | 1021040201001 | M40*1.5 | M32*1.5 | 9 | 13 | 42 | 53 |
| 7 | WNSC-M50M40 | 1021040461001 | M50*1.5 | M40*1.5 | 9 | 14 | 57 | 107 |
| 8 | WNSC-M63M50 | 1021040481001 | M63*1.5 | M50*1.5 | 11 | 14 | 65 | 141 |

PG制螺纹/PG Thread

| 序号 No. | 产品名称 Part code | 产品料号 Part NO. | 外螺纹规格AG Outside Thread | 内螺纹规格LG Inside Thread | 外螺纹长度GL Outside thread length | 总长L Total length | 扳手尺寸SW Wrench size | 重量/Weight g |
|---|---|---|---|---|---|---|---|---|
| 1 | WNSC-PG9PG7 | 1021040021001 | PG9 | PG7 | 6 | 9 | 17 | 6 |
| 2 | WNSC-PG11PG9 | 1021040031001 | PG11 | PG9 | 7 | 11 | 20 | 9.6 |
| 3 | WNSC-PG13.5PG11 | 1021040041001 | PG13.5 | PG11 | 7 | 10 | 22 | 6 |
| 4 | WNSC-PG16PG13.5 | 1021040051001 | PG16 | PG13.5 | 7 | 11 | 24 | 8 |
| 5 | WNSC-PG16PG9 | 1021040051002 | PG16 | PG9 | 7 | 11 | 24 | - |
| 6 | WNSC-PG21PG13.5 | 1021040061002 | PG21 | PG13.5 | 7 | 11 | 30 | 28.2 |
| 7 | WNSC-PG21PG16 | 1021040061001 | PG21 | PG16 | 7 | 11 | 30 | 23.8 |
| 8 | WNSC-PG29PG21 | 1021040071001 | PG29 | PG21 | 8 | 13 | 40 | 57.3 |
| 9 | WNSC-PG36PG29 | 1021040081001 | PG36 | PG29 | 9 | 13 | 50 | 81.2 |
| 10 | WNSC-PG42PG36 | 1021040091001 | PG42 | PG36 | 9 | 15 | 57 | 75 |
| 11 | WNSC-PG48PG42 | 1021040101001 | PG48 | PG42 | 10 | 15 | 65 | 200.5 |

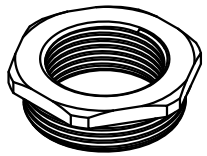

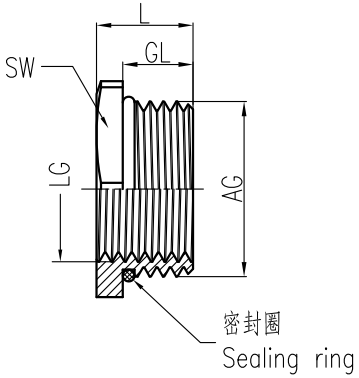


技术参数:
- 材料:
  - 主体: 黄铜镀镍
  - 密封元件: NBR
- 形状: 六角
- 温度范围: -40℃-100℃,短时间可以达到120℃
- 使用场合: 适用于需要将螺纹直径缩小的场合
- 防护等级: IP68（在使用O型圈的情况下）

Technical specification:
- Material:
  - Body: nickel-plate brass
  - Sealing: NBR
- Shape: hexagonal
- Temperature range: -40℃-100℃, short-term 120℃
- Applications: apply to the situation of the diameter need to be reduced
- Degree of protection: IP68(with O-sealing)

| 标记 Mark | 处数 Number | 变更描述/Description | 签名 Signature | 日期 Date |
|---|---|---|---|---|
| | | | | |
| | | | | |
| | | | | |

| | 姓名/Name | 日期/Date | | 姓名/Name | 日期/Date |
|---|---|---|---|---|---|
| 绘图 Drawn | BQ LUO | 18.10.2010 | 标准化 Stand. | - | - |
| 审核 Checked | P RAO | 18.10.2010 | | | |
| 工艺 Process | - | - | 批准 Approved | YY LIN | 18.10.2010 |

| | | | |
|---|---|---|---|
| 表面处理 Finish | - | | |
| 材料 Material | - | | |
| 比例 Scale | 版本 REV. | 重量 Weight | 数量 Qty. |
| 2:3 | V1.0 | 107g | - |

All Dimensions in mm
Original Size DIN A 4

| | |
|---|---|
| 图号 Drawing No. | - |
| 产品代号 Part Code | WNSC-M50M40 |
| 产品料号 Part No. | 1021040461001 |
| 产品名称 Part Name | - |

厦门唯恩电气有限公司
XIAMEN WAIN ELECTRICAL CO.LTD